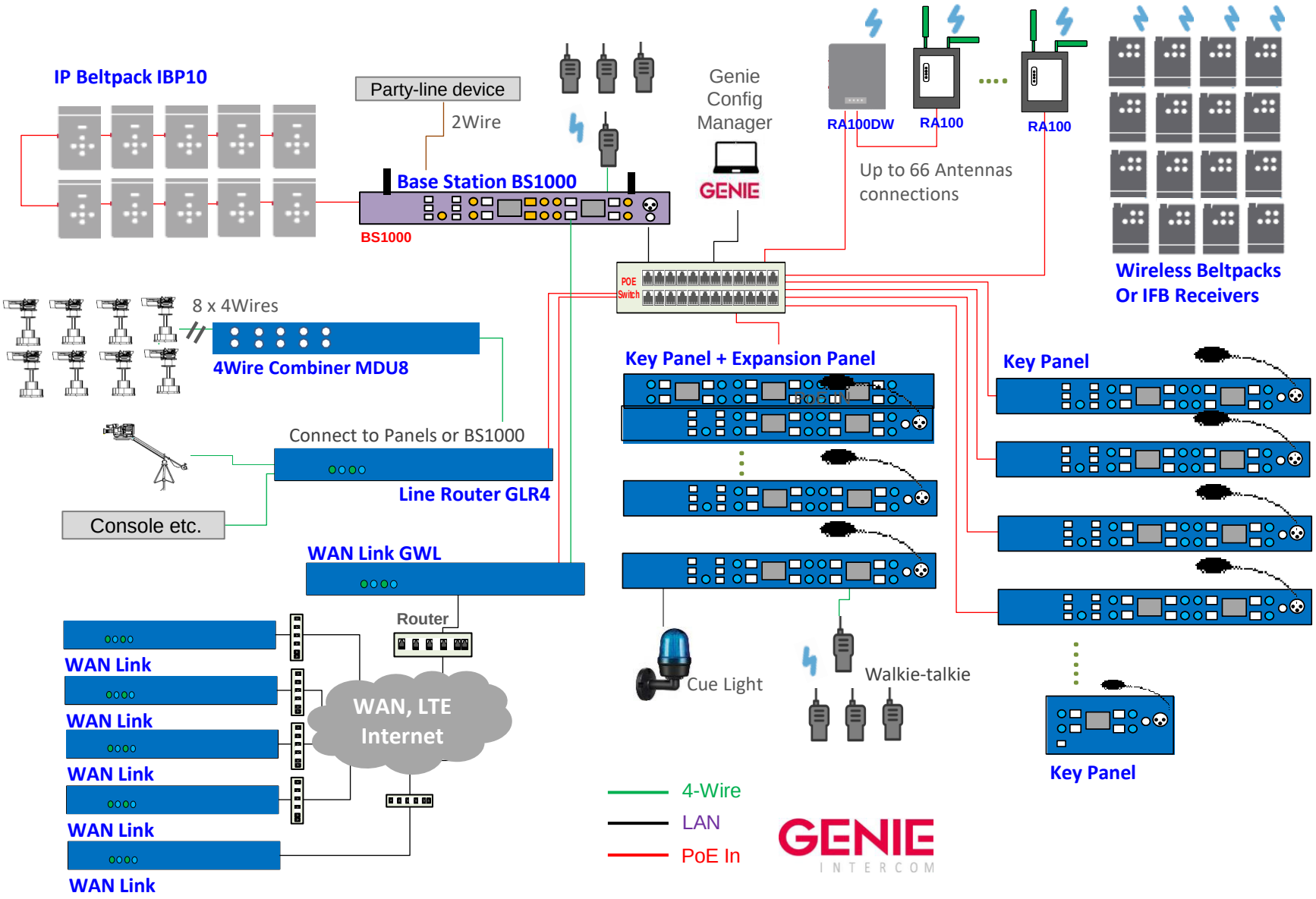# Genie System Configuration